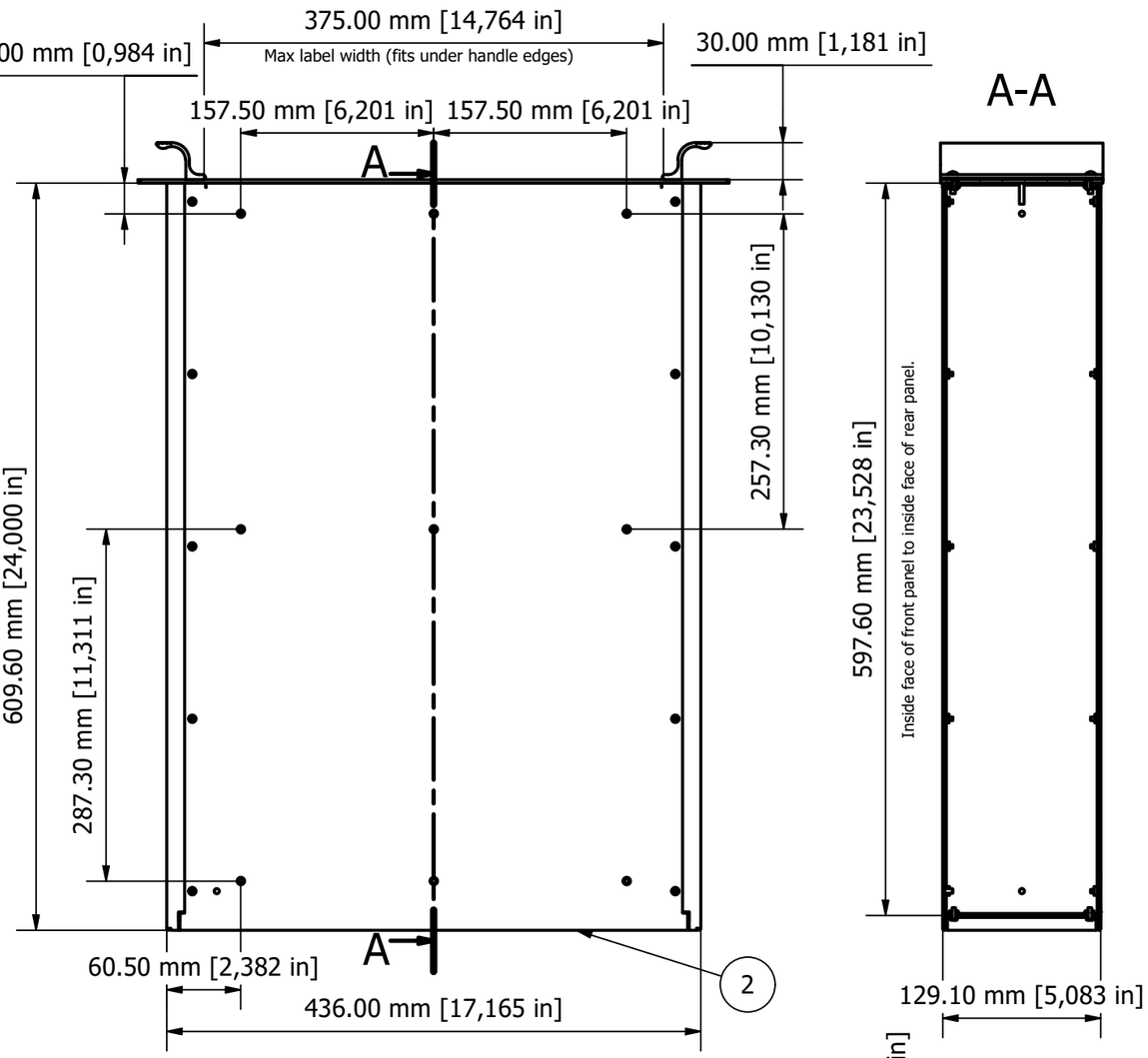

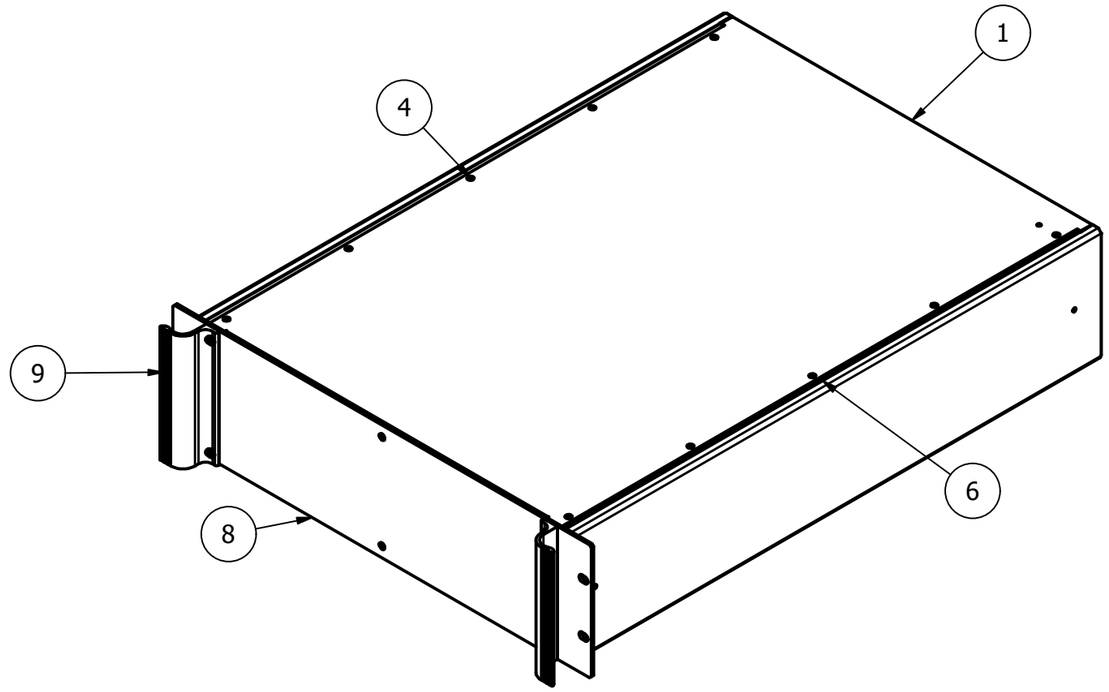

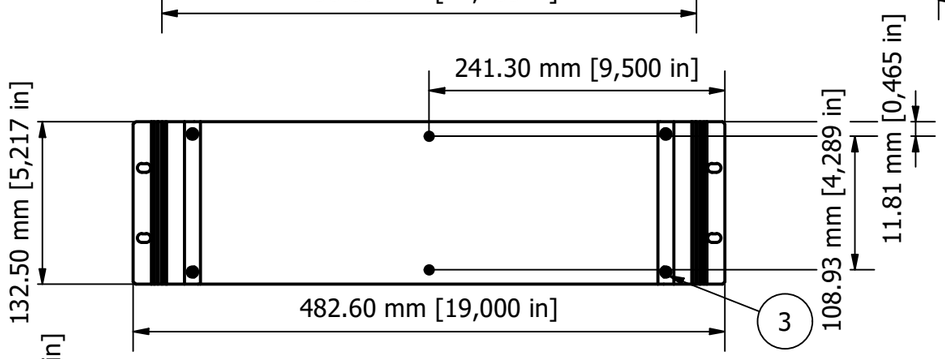

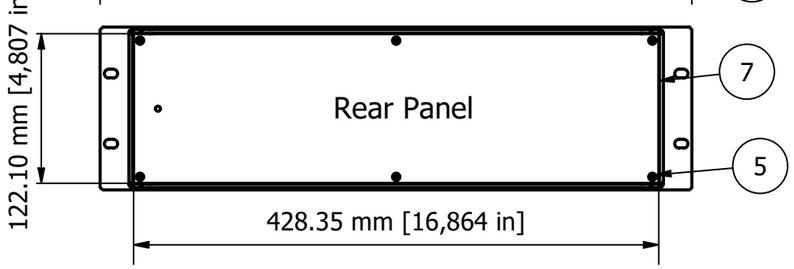

NOTES.
Case metalwork is made from 1.5 mm aluminium
and painted RAL 9005 fine texture black.
Front panel is made from 3 mm aluminium.
Handles are made from an aluminium extrusion.
All parts are fitted with M4 studs for earth use.

PARTS LIST

ITEM	QTY	PART NUMBER	DESCRIPTION
1	1	M6203089	Top Panel
2	1	M6203099	Base Panel
3	4	M4x16 CSK Screw (B)	Front Panel Screws
4	22	M3x8 CSK Screw (B)	Cover and Front Screws
5	6	M3x8 Pan Screw (B)	Rear Panel Screws
6	2	M6202379	Side Panel
7	1	M6201039	Rear Panel
8	1	M6219039	Front Panel
9	2	M6200309	Handles

FIRST ANGLE PROJECTION

Designed by	Description	Date	Scale
R Hill	Combimet 3U x 19" x 24" Unvented	03/02/2022	1:5

METCASE ENCLOSURES
15 Brunel Way, Segensworth East, Fareham,
Hampshire, PO15 5TX, UK.
Tel: +44 (0)1489 583858 Email: sales@metcase.co.uk
www.metcase.com

Part Number	Issue	Sheet
M6219379	2	1 / 1

© OKW Enclosures Ltd (Date as shown). This drawing contains proprietary information of OKW Enclosures Ltd and is tendered subject to the following conditions. The information be retained in confidence, not be reproduced or copied, and not be used or incorporated in any product, unless permission is obtained in writing from OKW Enclosures Ltd.